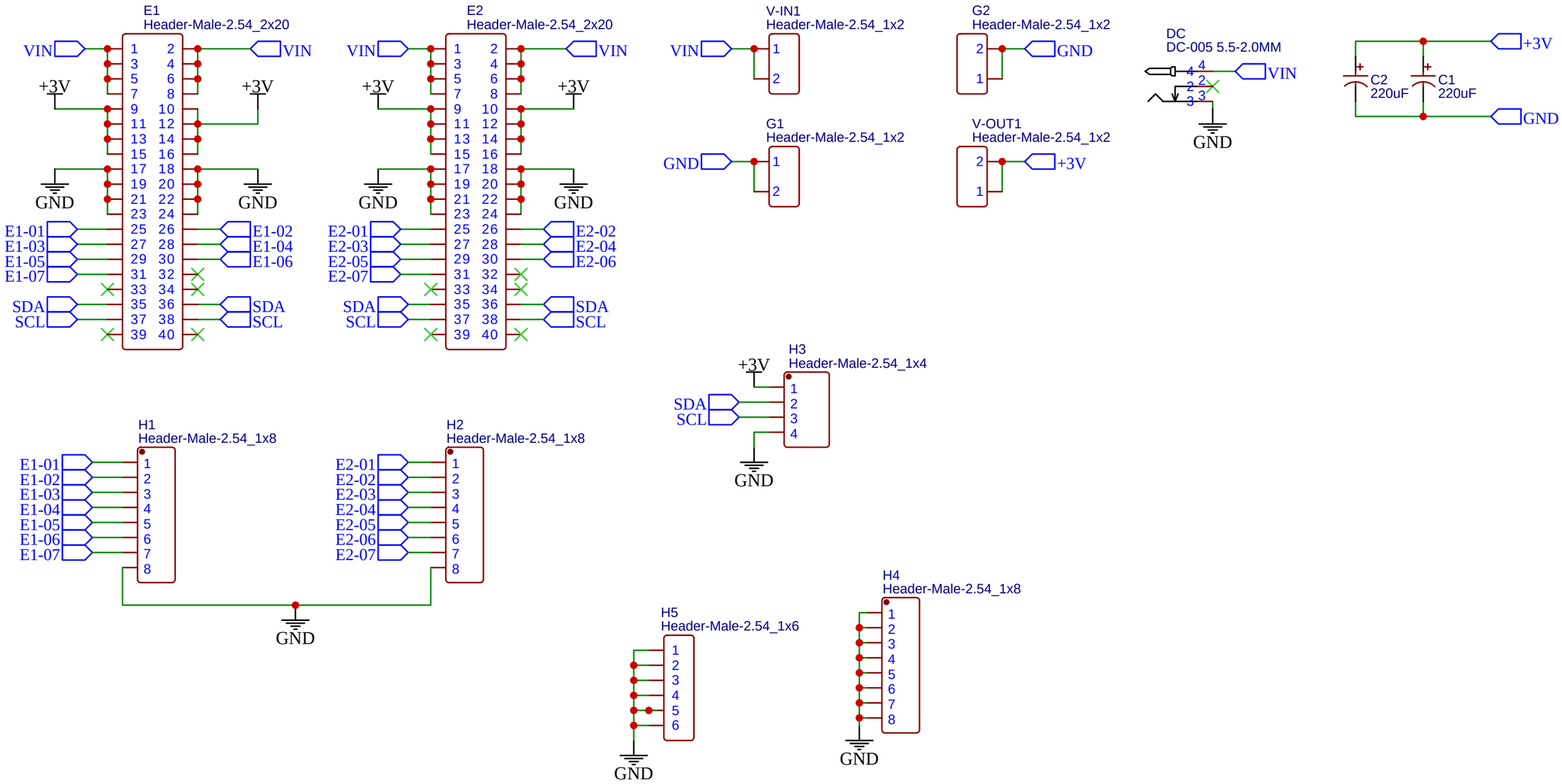

TITLE: ATMEGA I2C Base Card	REV: 1.0
Company: MakerIoT2020	Sheet: 1/1
Date: 2022-08-04 Drawn By: jean.redelinghuys	